Next

A product by
Rancilio Group

NEXT

YOUR NEXT COFFEE IS NOT THAT FAR

EGRO

ENGLISH

YOUR NEXT COFFEE IS NOT THAT FAR

Egro Next is the new frontier in fully automatic coffee machines. Featuring stylish ergonomic design, Egro Next is intuitive, easy to use and to clean. It guarantees top-quality results for all types of coffee, milk and powder-based drinks. Recommended for locations with an average daily consumption of 300 coffee cups, Egro Next has been designed mainly for use in hotels, offices, fast-food restaurants, convenience stores, service stations, cafés and self-service facilities, and is available in 3 versions: Pure Coffee, Quick Milk, and NMS+.

PURE COFFEE & QUICK MILK

x250

CUPS PER DAY

NMS+

x300

CUPS PER DAY

HIGHLIGHTS

1
COFFEE

Swiss Coffee Technology
Top-quality results at every cup, thanks to a stainless steel brewing group equipped with Self-Adjusting Grinder technology and separate boilers for coffee and steam.

2
INNOVATIVE MILK SYSTEM

NMS+
Adjust the frothing level and milk temperature for each beverage. And with the NMS+ version, you can personalise every recipe with cold milk foam thanks to the CMF system.

3
INTERFACE

10" HD Touchscreen
Swipe, tap and scroll with ease through the menu. It's as easy as using your smartphone, with all preferences and drink selections at your fingertips.

Easy Switch
Customise different menus and easily switch between self-service mode for breakfast and barista mode for lunch or dinner.

4
DESIGN

Built to last
Stainless steel brewing group and high-value components come together in a robust design for high performance and maximum durability.

5
ADD-ON

Total flexibility for every business
Modular portfolio, flexibility, add-ons, fridges, optional features and payment systems to create a bespoke setup for every instance.

6
CLEANING

Easy to clean
Daily cleaning program and rinsing cycles.

SWISS COFFEE TECHNOLOGY

STAINLESS STEEL BREWING UNIT

The stainless steel brewing unit is available in two brewing chambers with different capacities, either 18 g or 22 g. (optional). The latter version allows you to prepare extralarge American coffees in a single brewing cycle.

STAINLESS STEEL FLAT BURRS

High-precision grinders are equipped with stainless steel burrs to provide consistent coarseness for top-quality espresso brewing.

54mm

BURRS DIAMETER

SIMULTANEOUS DISPENSING

The two independent boilers, one dedicated to coffee and the other to steam, allow the simultaneous dispensing of hot water and coffee.

0.5 l /16.9 oz

COFFEE BOILER CAPACITY

1.9 l /64.2 oz

STEAM BOILER CAPACITY

E SELF-ADJUSTING GRINDER (SAG)

The Self-Adjusting Grinder (SAG) can correct any in-cup quality alterations in real time, ensuring coffee consistency in every cup.

2x 1 kg/2.2 lb

COFFEE BEAN HOPPER CAPACITY

- Egro Patented Technology

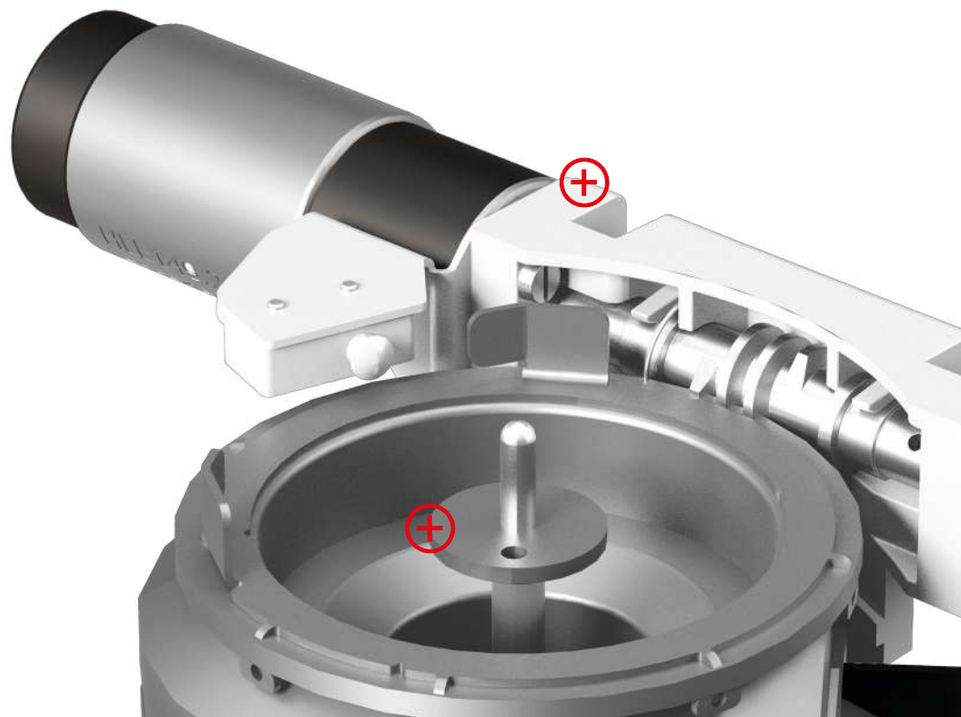

MILK SYSTEMS

Egro Next offers two different systems for the automatic preparation of fresh milk drinks: Quick Milk and NMS+.

QUICK MILK

Quick Milk is the right choice for those who do not have to manage a heavy workflow and want to offer their customers a menu with the great coffee classics such as cappuccino and latte macchiato. Quick Milk is an intuitive milk system that is easy to use and maintain.
The Quick Milk system can be used with the MK4 (4.5 l) fridge or the FUM fridge (4 l).

LACTOSE-FREE MILK (NMS+ VERSION ONLY)*

2 types of milk always at your disposal to work simultaneously with soy milk, oat milk or skimmed milk. And thanks to the system that prevents any type of contamination, you can also offer your customers lactose-free milk, ensuring maximum variety in total safety.

NMS+

NMS+ is Egro's most advanced milk system that guarantees the best results in the cup, especially when preparing milk foam. For each type of drink, it offers the option of adjusting the temperature and frothing level of the milk and choosing between two different types of fresh milk. Designed for locations that require high productivity, NMS+ also offers a more advanced cleaning system that ensures the highest standards of efficiency and hygiene. The NMS+ system requires the installation of the MK6 fridge (6 l), the FUM fridge (4 l) or an external pump module (SMPU) for fridges to be placed under the counter.

COLD MILK FOAM (CMF)

The CMF system (optional) is the solution for automatically preparing cold milk foam for every drink by selecting three different frothing levels via the interface. CMF can only be configured for NMS+ milk system.

MK6 fridge with lactose-free milk system

3.5 l
MILK CONTAINER

1.75 l
LACTOSE-FREE MILK CONTAINER

FUM fridge with lactose-free milk system

2.5 l
MILK CONTAINER

1.25 l
LACTOSE-FREE MILK CONTAINER

* Lactose-free milk system: < 1g of lactose per 1000 g of ready-to-drink product

FRIDGES

MK6 FRIDGE (6 l)

MK6 FRIDGE

6 litre fridge with display, level sensor and integrated pump module. On request, the Next fridge is available with the CMF system for cold milk foam or with the lactose-free milk system. It can also be ordered with one or two milk containers. With the SMPU pump modules, the MK6 fridge can also be installed under the counter to free up space on the worktop.

FUM FRIDGE

4-litre fridge, with pump module and level sensor, which can be placed under the main unit of the machine to optimise worktop space. it is also available in a version with two milk containers and the "lactose-free milk system".

E SMPU

For the NMS+ version, a wide range of pump modules is available to install the fridges under the counter.

- Egro Patented Technology

MK4 FRIDGE

Perfectly designed for spaces with minimal counter area and a preference for fresh milk beverages, the MK4 compact 4.5-L fridge is a convenient solution with a single detachable milk container. This fridge is easily installable, and allows you to customize temperature settings effortlessly with the practical mini display on the front.

MK4 FRIDGE (4.5 l)

WATER AND STEAM

WATER

TEA AND HERBAL INFUSIONS

Different programmable water temperature levels and dosages for tea and other herbal infusions.

WATER WAND

The separate water wand is extendable to suit all the operator's needs and it is possible to deliver water while brewing coffee.

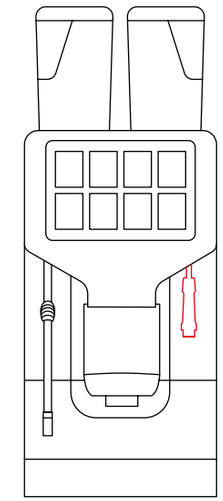

STEAM

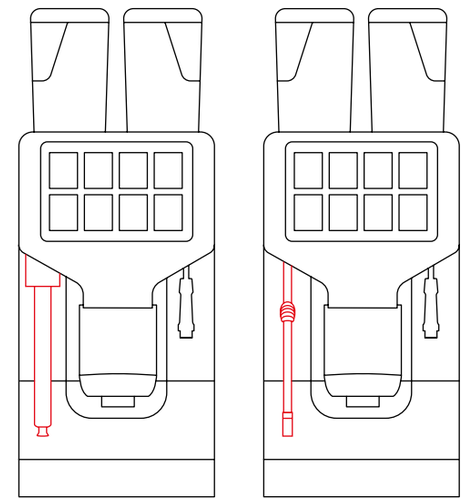

iSTEAM

The iSteam wand (optional) is designed to heat and froth milk automatically, adjusting the consistency of the cream (6 levels) and the temperature of the milk via the interface. For superior steam performance, for the Pure Coffee version only, iSteam Plus is also available.

COOL TOUCH STEAM WAND

The cool touch steam wand can be handled in safety and comfort.

SMART INTERFACE

EASY RECIPE

The machine provides step-by-step instructions to easily create any recipe in just a few taps. The user can select a blend or single origin coffee, choose the desired coffee strength, set the pre-infusion time, add milk or favorite instant products.

MULTI-DRINK

Thanks to the Multi-Drink feature, it is possible to associate multiple sizes with the same beverage.

TOUCHSCREEN INTERFACE

Access, select and adjust settings as easily as you do on your smartphone, thanks to the intuitive 10" HD touchscreen interface.

x10

MENU AVAILABLE
IN 10 LANGUAGES

EASY SWITCH

Customise different menus and quickly switch between them to always have the perfect settings for any situation.

THREE ACCESS LEVELS

Egro Next has three dedicated menus to offer the best user experience to baristas, managers and technicians.

QUICK RESTART

During start-up, the machine skips the normal coffee circuit rinse cycle and is immediately ready for use if the temperature inside the coffee boiler is still above a certain set point.

QUEUE MODE

The selected items are placed in a queue, possibility for any drink to be brewed earlier or later, to be cancelled or others added.

MULTIMEDIA

Images and promotional videos can be uploaded to personalise the touchscreen, and also be displayed during brewing.

iBUTTON

iButton gives extra information on the product selected as the nutritional value and the origin of coffees.

COUNTERS

Counters are available to display the number of brewed drinks, the income generated, SAG statistics and cleaning settings.

SELF-SERVICE MODE

Customers can prepare one drink at a time on their own, without the support of the staff.

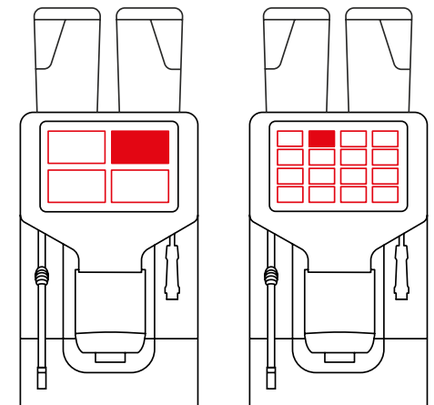

DESIGN AND ERGONOMICS

With its polished stainless steel finish, Egro Next is a stylish, ergonomic, and highly functional machine, with clean, soft lines and scratch-resistant surfaces. The aluminium display frame matches the modern look of the machine.

SPACE SAVING DESIGN

30cm / 12in

MAIN UNIT WIDTH

LED LIGHTS

Maximum visual comfort thanks to LED lights on the work area.

STAINLESS STEEL TRAY

The stainless steel tray is easy to remove and clean. In the self-service version it has two different cup-placing positions, to ensure that any type of cup is always placed correctly under the dispensing spout.

COLOUR

Colour available for the main unit, fridges and all add-ons:

● BLACK

AUTOMATIC SPOUT

The Automatic Spout adjusts the height of the dispensing spout to suit the drink selected and fit the type of cup being used. The spout is easy to removefor cleaning.

ADD-ON

BENEFITS

Boost the potential of your Egro Next with add-ons.

EGRO NEXT NMS+

+ NEXT FRIDGE
+ POWDER MODULE
+ CUP WARMER

POWDER MODULE

Offer customers new options by setting up an external Powder Module: select ingredients to automatically mix, prepare and dispense.

2x 1.8 l

POWDER HOPPERS CAPACITY

CUP WARMER

External cup warmer with adjustable temperature level and three heatable trays.

PAYMENT SYSTEMS

Enjoy utmost flexibility with a range of standard and optional payment system solutions.

GUM

External container for coffee grounds to be placed under the machine.

750 g /1.6 lb

COFFEE GROUNDS CONTAINER CAPACITY

NEXT X2 NMS+

Next X2 NMS+ is a special configuration that includes two Next NMS+ and a centrally positioned MK6 refrigerator. It is the ideal solution for all locations that require a high performance level and have to manage peaks of work at several times of the day.

RECOMMENDED DAILY OUTPUT

NEXT X2 NMS+

x600

CUPS PER DAY

OTHER CONFIGURATIONS

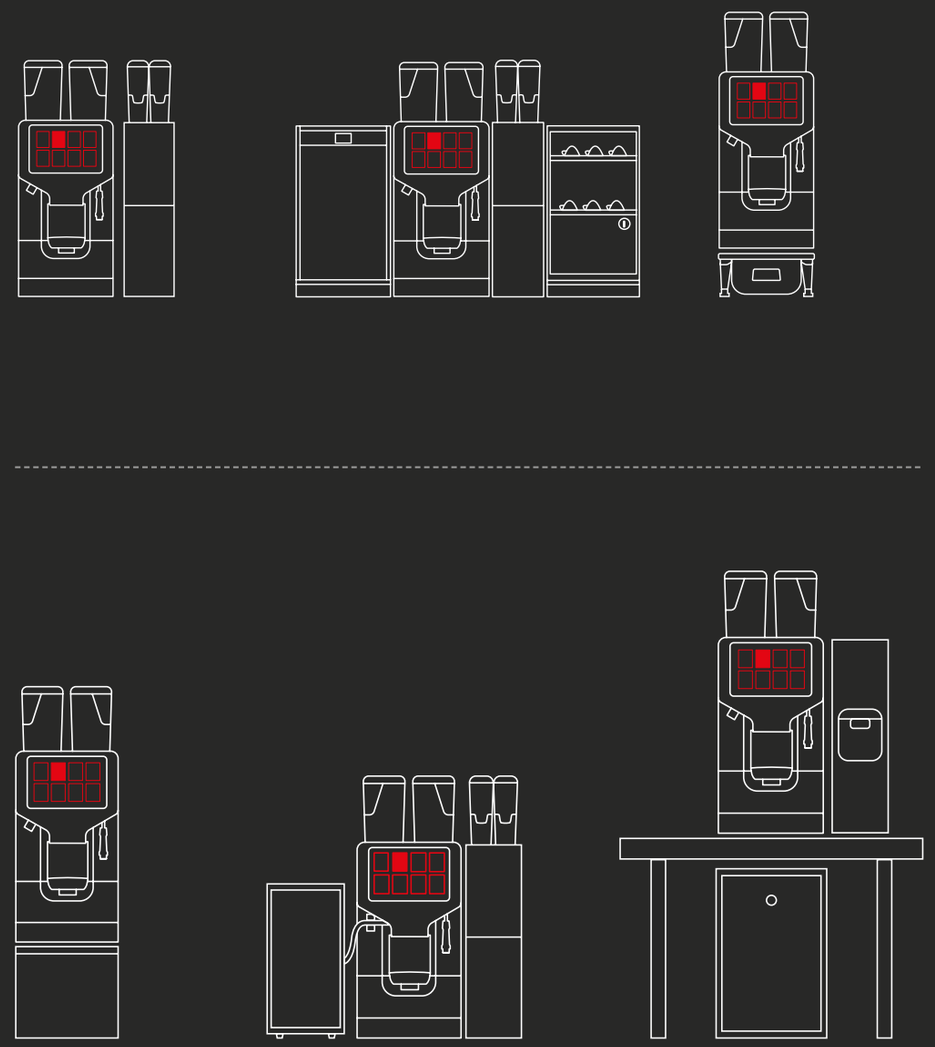

CLEANING AND MAINTENANCE

CLEANING

CLEANING

Fast and simple cleaning makes it easy to uphold high health and hygiene standards.

RINSING CYCLE

A rinsing cycle starts automatically at a preset time after the last beverage delivery.

MAINTENANCE

EASY ACCESS TO ALL COMPONENTS

The convenient opening of the front panel and quick access to the main internal components facilitates easy maintenance operations.

USB PORT

Next comes with a USB port to transfer technical data and upload images and videos.

DURA BREW

Dura Brew is a hermetically sealed system requiring little maintenance, and thus reducing the total cost of ownership.

- Egro Patented Technology

NEXT: TECHNICAL DATA

DIMENSIONS

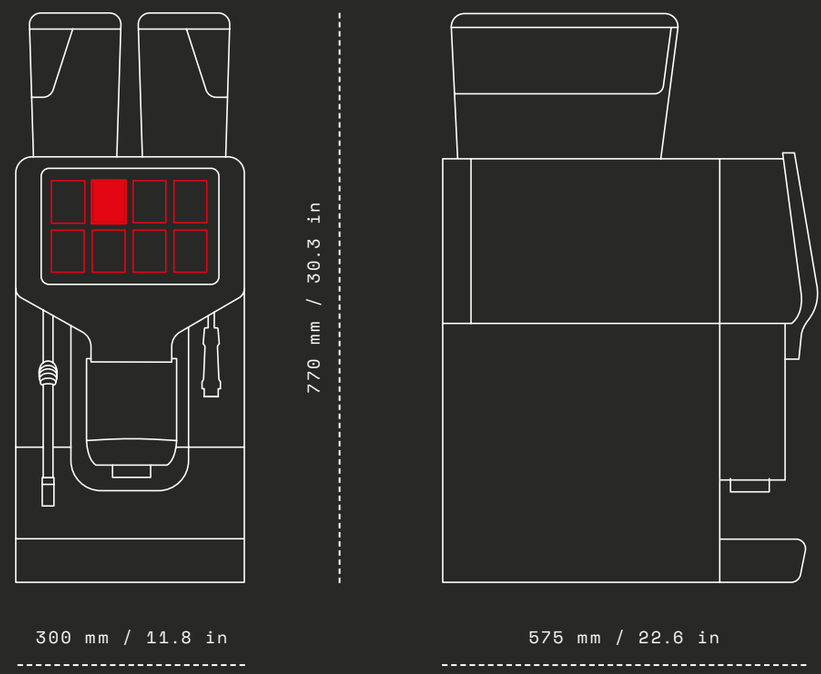

MAIN UNIT: TECHNICAL DATA

W x D x H
300 x 575 x 770 mm
11.8 x 22.6 x 30.3 in

WEIGHT
57 kg / 125.7 lb

POWER SUPPLY
220–240 V3~, 50-60 Hz (6.0 kW)
220–240 V3~, 50-60 Hz (5.5 kW)
380–415 V2N~, 50-60 Hz (6.0 kW)
380–415 V2N~, 50-60 Hz (5.5 kW)
220–240 V~, 50-60 Hz (6.0 kW)
220–240 V~, 50-60 Hz (5.5 kW)
220–240 V~, 50-60 Hz (3.6 kW)
220–240 V~, 50-60 Hz (3.1 kW)
208/220-240 V2ph~, 60 Hz (5/6 kW)
208/220-240 V2ph~, 60 Hz (2/3 kW)

WATER SUPPLY
Water mains connection

NOISE LEVEL DURING USE
< 70 db

INTERFACE

TOUCH
10" Touchscreen

COLOUR

● BLACK

RECOMMENDED DAILY OUTPUT*

NEXT PURE COFFEE	NEXT QUICK MILK	NEXT NMS+
x250	x250	x300
CUPS PER DAY	CUPS PER DAY	CUPS PER DAY

* For more information about the delivery capacity and energy consumption of Egro coffee machines, please visit: https://www.grosskuechen.cert.hki-online.de/en

NEXT

NEXT PURE COFFEE

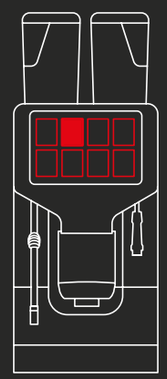

NEXT QUICK MILK

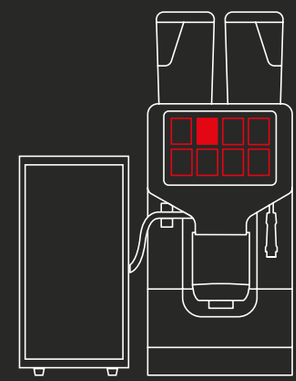

NEXT NMS+

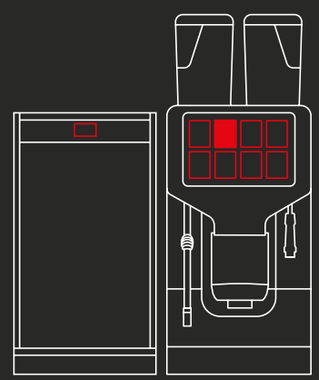

NEXT X2 NMS+

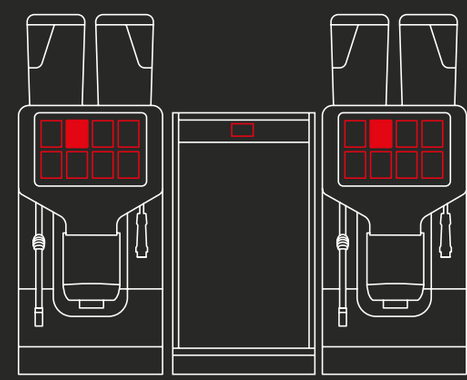

FEATURES

	PURE COFFEE	QUICK MILK	NMS+	X2 NMS+*
COFFEE				
1 Self Adjusting Grinder (SAG)	●	●	●	●
Second Self Adjusting Grinder (SAG)	◐	◐	◐	◐
18-g brewing chamber	●	●	●	●
22-g brewing chamber (BC22)	◐	◐	◐	◐
Hot water bypass (1 cup of Americano)	◐	◐	◐	◐
Hot water bypass (2 cups of long coffee)	◐	◐	◐	◐
HOT WATER				
central hot water outlet	●	●	●	●
Right side hot water outlet	◐	◐	◐	◐
STEAM				
Cool touch steam wand	◐	◐	◐	◐
Automatic steam wand (iSteam)	◐	◐	◐	◐
Automatic steam wand - 3 valves (iSteam Plus)	◐	—	—	—
MILK SYSTEMS				
Quick Milk	—	●	—	—
NMS+	—	—	●	●
NMS+ with Cold Milk Foam (CMF)	—	—	◐	—
2 types of milk	—	—	◐	◐
Lactose-free milk system	—	—	◐	—
FRIDGES				
MK6 fridge	—	—	◐	●
MK4 fridge	—	◐	—	—
FUM fridge	—	◐	◐	—
Pump Modules (SMPU)	—	—	◐	◐
EXTRA FEATURES				
Automatic Spout	◐	—	◐	◐
Under counter grounds chute	◐	◐	◐	◐
Lock package	◐	◐	◐	◐
Option Self (Lock package, Cup stopper)	◐	◐	◐	◐
Payment systems	◐	◐	◐	◐
Kitchen Connect (telemetry system)	◐	◐	◐	◐
ADD-ONS				
Powder module	◐	◐	◐	◐
Cup Warmer	◐	◐	◐	◐
GUM	◐	◐	◐	◐

Standard ● Optional ◐ Not available —

* per machine

ADD-ONS: TECHNICAL DATA

MK6 FRIDGE

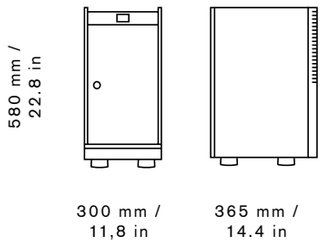

COLOUR

● BLACK

W × D × H
300 × 365 × 580 mm
11.8 × 14.4 × 22.8 in

WEIGHT
29 kg / 63.9 lb

POWER SUPPLY
220–240 V, 50-60 Hz, 0.25 A
110-120 V, 60 Hz, 0.77 A
Japan: 100 V, 50-60 Hz, 0.7 A

MILK CONTAINER CAPACITY (1 TYPE OF MILK)
6 l / 1.58 gal US / 1.32 gal UK

MILK CONTAINER CAPACITY (2 TYPES OF MILK)
2x 3 l / 0.79 gal US / 0,66 gal UK

MILK LEVEL SENSOR
Included

COOLING AGENT
R600a 14g

MK4 FRIDGE

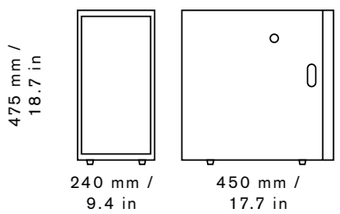

COLOUR

● BLACK

W × D × H
240 x 450x 475 mm
9.4 x 17.7 x 18.7 in

WEIGHT
9 kg / 19.8 lb

POWER SUPPLY
220–240 V~, 50-60 Hz, 0.5 A

MILK CONTAINER CAPACITY
4.5 l / 1.19 gal US

FUM FRIDGE

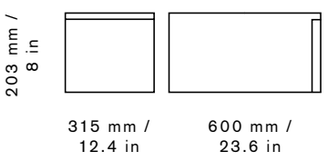

COLOUR

● BLACK

W × D × H
315 × 600 × 203 mm
12.4 × 23.6 × 8 in

WEIGHT
18.5 kg / 40.8 lb

POWER SUPPLY
220 – 240 V~, 50 Hz, 0.8 A
220 V~, 60 Hz, 0.9 A
115 V ~, 60 Hz, 1.3 A

MILK CONTAINER CAPACITY
4 l

COOLING AGENT
R600a 16g (220-240 V) R134a 40g (115 V)

POWDER MODULE

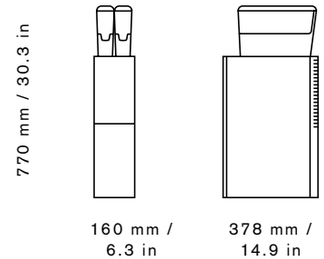

W × D × H
160 × 378 × 770 mm
6.3 × 14.9 × 30.3 in

WEIGHT
13 kg / 28.1lb

POWER SUPPLY
220–240 V~, 50-60 Hz
120 V~, 60 Hz

POWER RATING
0.1 kW

POWDER HOPPER CAPACITY
2x 1.8 l

COLOUR

● BLACK

CUP WARMER

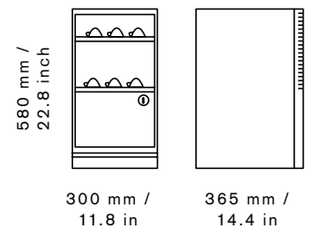

W × D × H
300×365×580 mm
11.8×14.4×22.8 inch

WEIGHT
14 kg / 30.1lb

POWER SUPPLY
220–240 V~, 50 Hz

POWER RATING
420 W

COLOUR

● BLACK

PAYMENT SYSTEMS

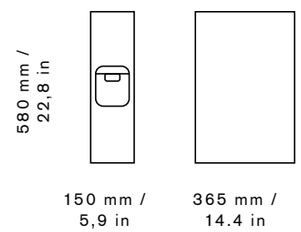

W × D × H
150 × 365 × 580 mm
5.9 × 14.4 × 22.8 in

POWER SUPPLY
24 V from coffee machine

COLOUR

● BLACK

GUM

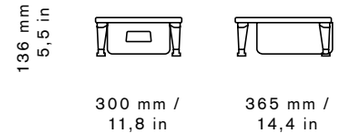

W × D × H
300 × 365 × 136 mm
11.8 × 14.4 × 5.5 in

COFFEE GROUNDS CONTAINER CAPACITY
750 g

POWER SUPPLY
24 V from coffee machine

COLOUR

● GREY

KITCHEN**CONNECT**

Empower your coffee business with smart data

Kitchen Connect is a premier cloud-based IoT solution for Egro coffee machines to gather and easy analyze all the valuable data generated by a single coffee machine or an entire fleet. With advanced telemetry, Kitchen Connect brings together reporting, asset management, menu control, quality monitoring, and service support into a powerful and fully customizable dashboard with widgets, maps and graphs.

Kitchen Connect turns complexity into opportunity, giving operators the tools to deliver a better service and streamline operations. With Kitchen Connect, every step of your coffee business becomes smarter, faster, and more effective. Kitchen Connect is scalable and adaptable, it grows with your business, for a difference you can truly measure every single day.

MAIN BENEFITS

USER-FRIENDLY DASHBOARD

Customize your site with widgets, charts and maps.

REAL-TIME MONITORING

Stay in control of your coffee machines.

REMOTE MEDIA MANAGEMENT

Update recipes on the screens.

EFFORTLESS SYSTEM INTEGRATION

Open cloud architecture and scalable API ecosystem.

SMART TECHNICAL SUPPORT

Solve issues faster and reduce downtime.

TRUSTED ENTERPRISE SECURITY

Protect your data with certified cloud infrastructure.

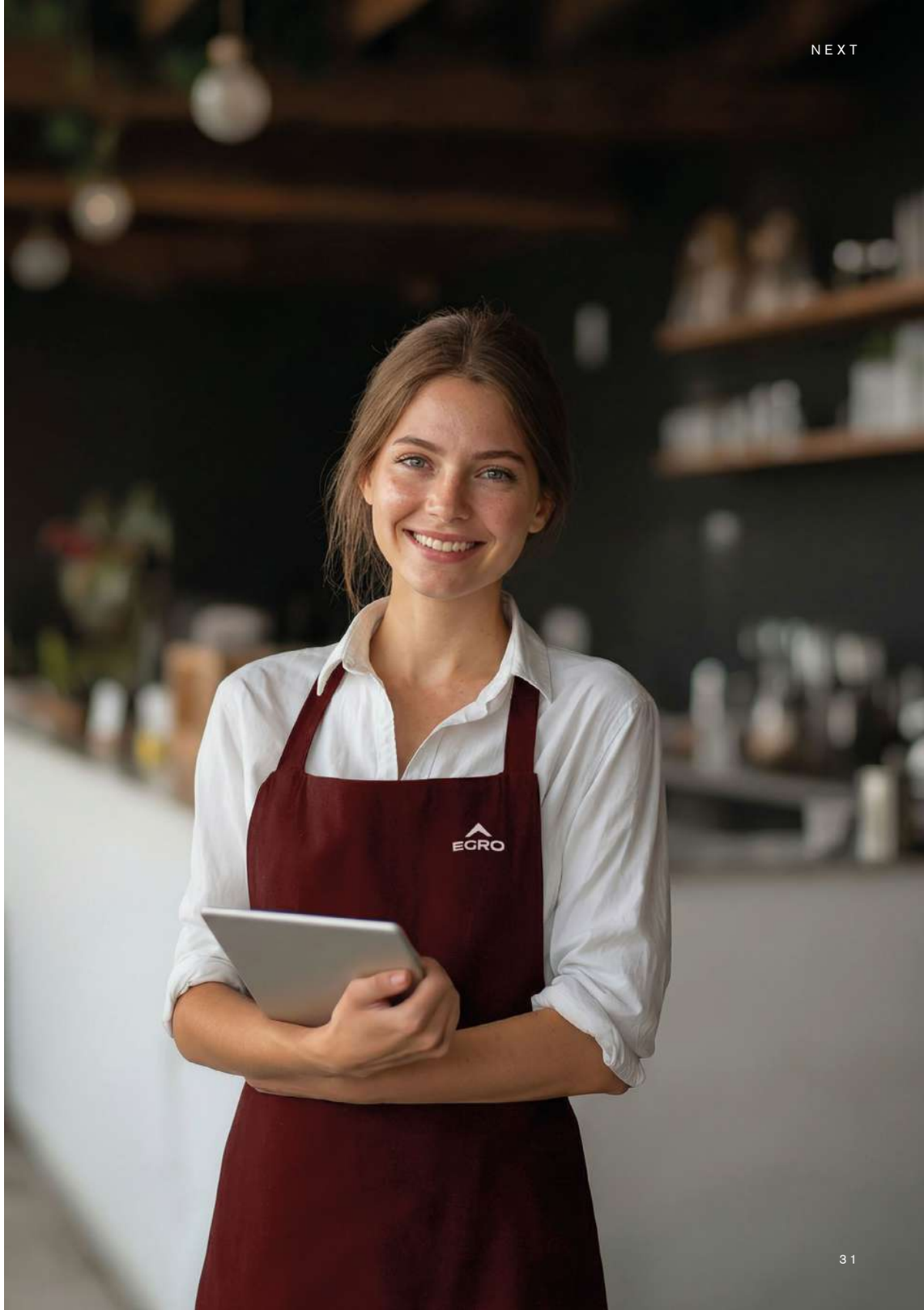

EN 90 011 264 | 2026-01

EGRO

BUILT FOR EXCELLENCE

egrocoffee.com

an Ali Group company

GROUP

The Spirit of Excellence