A Product by
Rancilio Group

RS1

BE INSPIRED. BREW DIFFERENT.

RANCILIO
SPECIALTY

ENGLISH

ILIO

BE INSPIRED.
BREW DIFFERENT.

The RS1 helps coffee professionals offer a better coffee experience by providing cutting-edge brewing technology combined with Rancilio expertise and a unique workflow design, resulting in an easy-to-use espresso machine with a great value.

RANCILIO SPECIALTY RS1

1

CUTTING EDGE BREWING TECHNOLOGY

Unmatched temperature control during the extraction allows the barista to fine tune every shot, resulting in a better cup profile.

2

UNIQUE WORKFLOW DESIGN

Providing baristas with enhanced workflow, resulting in less preparation time and better customer experience.

3

RANCILIO EXPERTISE

Rancilio expertise, employing our rich history of excellence and reliability.

CUTTING EDGE BREWING TECHNOLOGY

INNOVATIVE BREW GROUP HYDRAULICS

The RS1 features an innovative brewing group that maximizes efficiency and can introduce fresh water into the grouphead micro-boiler with every shot.

MULTI-BOILER SYSTEM

Each stainless steel group contains a micro-boiler and two heating elements, maximizing accuracy and thermal stability for both the water temperature and group body.

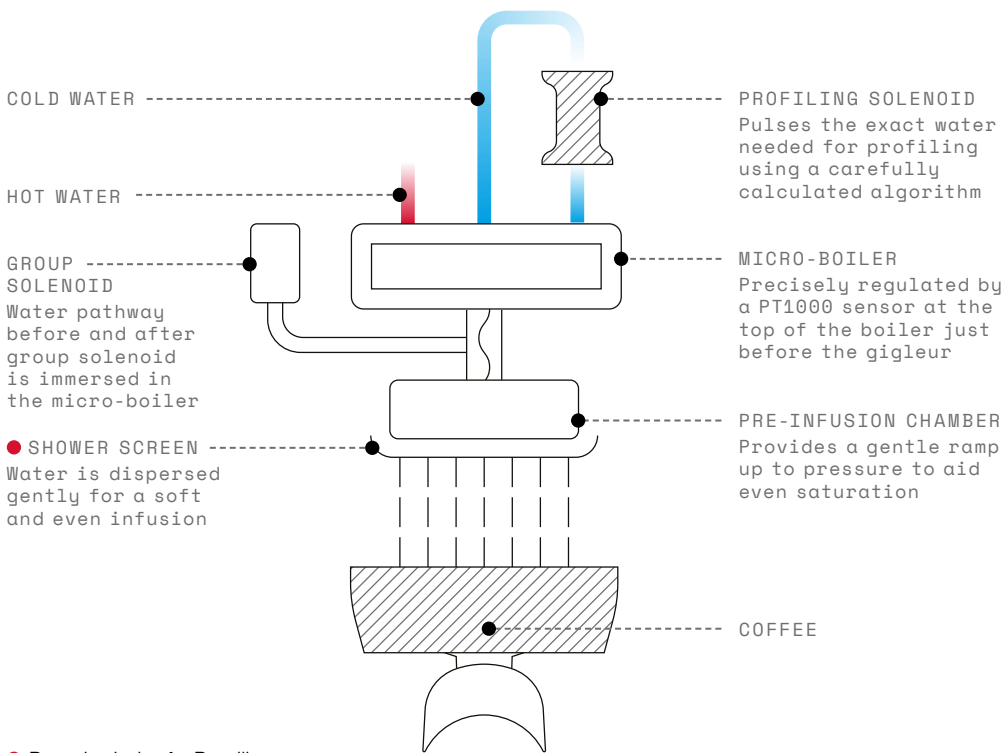

● Bespoke design for Rancilio

ADVANCED TEMPERATURE PROFILING

By accurately controlling the temperature profile of the espresso extraction, baristas are given a precise tool to unlock the flavor potential of each single origin coffee or blend.

- Brevetto Rancilio

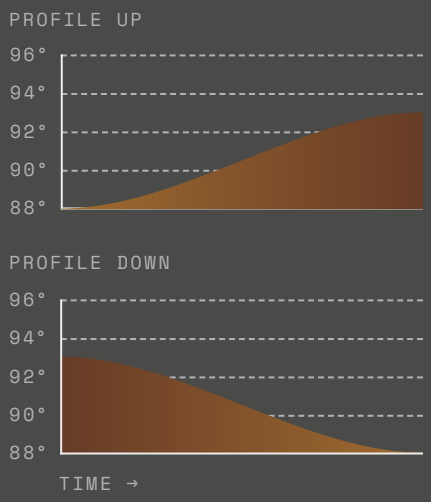

VARIABLE STEAM LEVER

Steam pressure delivery features a purge function and two programmable positions per side, perfect for switching between various pitcher sizes and different types of milk.

Y

Y SHAPED STEAM LEVER

2

POWER LEVELS

UNIQUE WORKFLOW DESIGN

PORTAFILTER

New stainless steel, weight balanced portafilters with a soft touch, ergonomic grip. Designed to sit flat for stable and consistent tamping.

SELF STANDING
Portafilter sits flat when resting on spouts

REMOVABLE SPOUTS
Can be unscrewed for easy cleaning

LOW PROFILE BODY

Compact, low profile body designed to facilitate customer interaction and service operations.

GROUPHEAD WITH DEDICATED DISPLAY

Dedicated screen for each brew group displays a digital shot clock and extraction temperature. Groupheads also feature simplified actuation and ample lighting provided by LED Lights.

RANCILIO EXPERTISE

DIGITAL TOUCHSCREEN INTERFACE

Ten years of developing and designing barista interfaces. Allows quick and easy access to all programming via the digital touchscreen.

TECH-FRIENDLY DESIGNV WITH ECO MODE

Easy access to pump adjustment and internal components, arranged to speed up maintenance operations. Insulated steam boiler with programmable water renewal, low power and eco mode.

WATER BUTTONS

Two water buttons with programmable dosage and temperatures levels.

COOL TOUCH STEAM WANDS

Cool touch steam wands ensure easy maneuverability when things heat up, and new proprietary steam tips allow for more even development.

A CLOSER LOOK

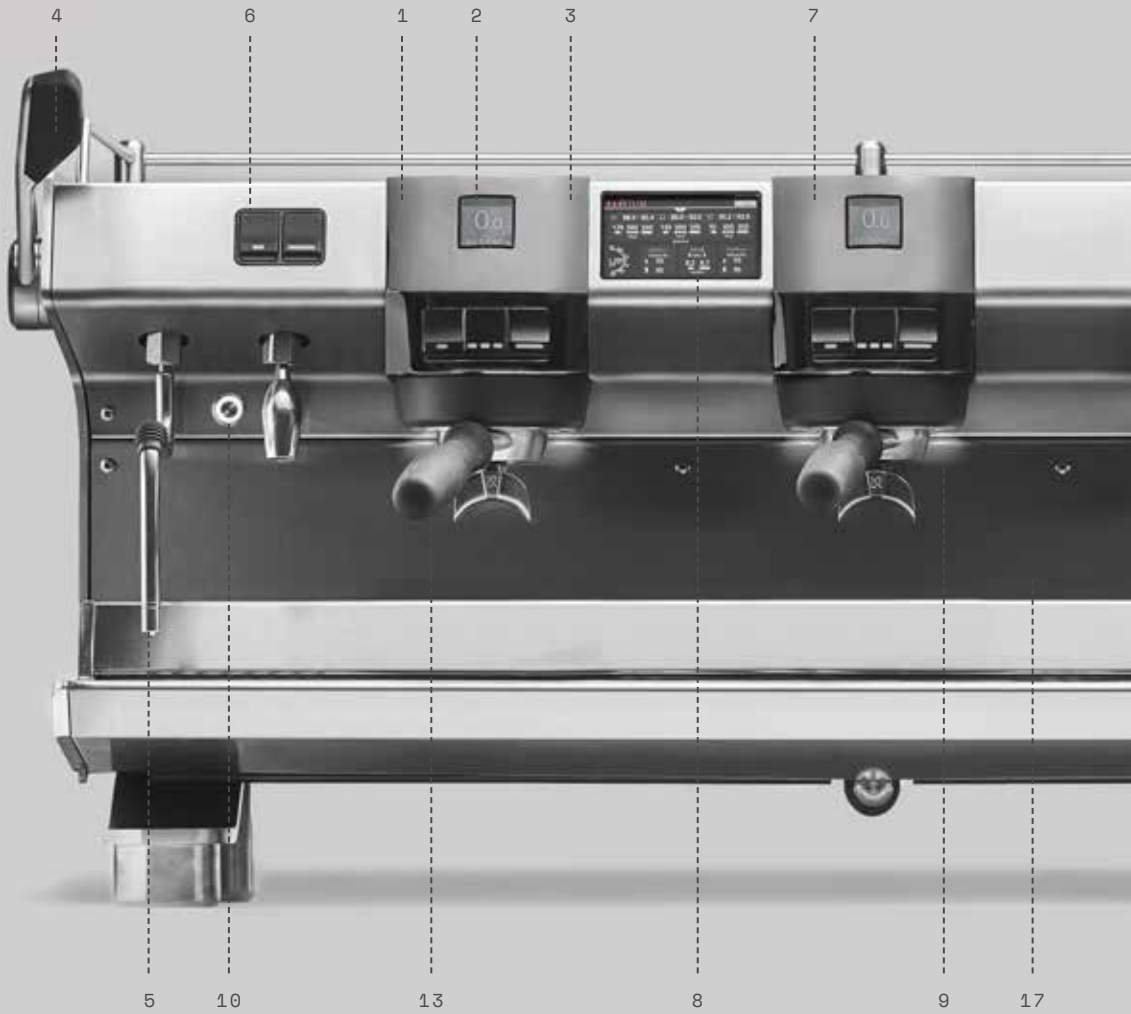

1. Rancilio Patented Advanced Temperature Profiling
2. Innovative brew group hydraulics
3. Multi-boiler system
4. Variable steam lever
5. Cool touch steam wands
6. Two water buttons (programmable with temperatures levels)
7. Independent brew groups
8. Digital touchscreen interface
9. Ample lighting for brewing LED lights
10. Back-lit buttons
11. Compact design
12. Dedicated grouphead display (digital clock and extraction temperature)

13. Weight balanced portafilters (soft touch with ergonomic grip)
14. Cup warmer (five temperature levels)
15. Removable drip tray (height adjustment for all cup sizes)
16. Two USB ports (for recharging smartphones and scales)
17. Insulated steam boiler

RS1 2GR / 2 GROUPHEADS

W × D × H
840 × 600 × 463 mm
33 × 24 × 18 in

WEIGHT
95 kg / 209.4 lb

TOTAL POWER
5600 W

BOILER CAPACITY
11 l / 2.4 gal UK / 2.9 gal US

RS1 3GR / 3 GROUPHEADS

W × D × H
1084 × 600 × 463 mm
43 × 24 × 18 in

WEIGHT
110kg / 242.5 lb

TOTAL POWER
6750 W

BOILER CAPACITY
16 l / 3.5 gal UK / 4.2 gal US

GENERAL SPECIFICATIONS

WORK SURFACE DEPTH
180 mm / 7.0 in

UNDER MACHINE HEIGHT
90 mm / 3.5 in

HEIGHT OF THE DRIP TRAY
80*-100-120 mm / 3*-4-5 in

VOLTAGE
220-240 V / 380-415 V (3N)

FREQUENCY
50/60 Hz

MICRO-BOILER CAPACITY
0.14 l / 0.03 gal UK / 0.04 gal US

*Optional: to be requested at the moment of purchase.

ALL ROUND FLEXIBILITY

All stainless steel body panels can be easily removed, customized, powder coated or branded to meet customer needs.

FRONT PANELS

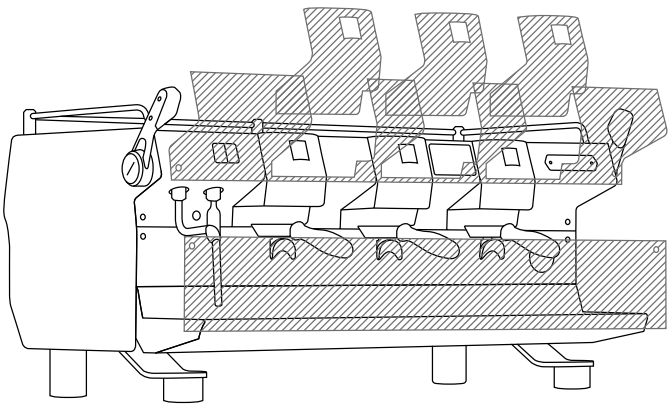

BACK PANELS

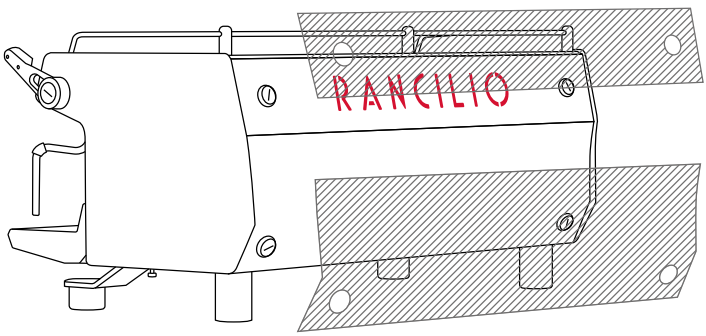

SIDE PANELS
AND DRIP TRAY

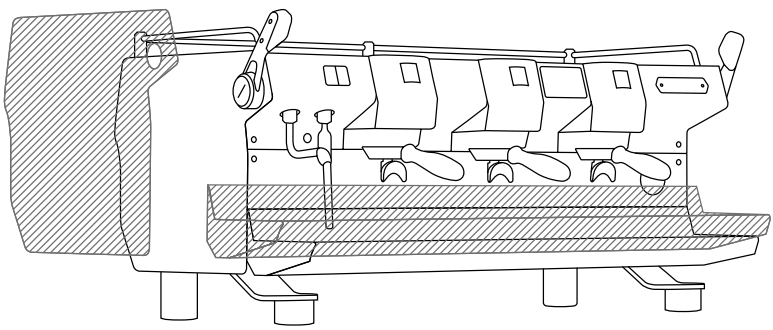

Customization is made by a third party organization not linked to Rancilio Group.

PORTAFILTER AND STEAM LEVER

Portafilter handles and rubber grips on the steam levers can be customized with wood or other materials.

Australia
moffat.com.au

New Zealand
moffat.co.nz

Australia
Moffat Pty Limited

Victoria/Tasmania
740 Springvale Road
Mulgrave, Victoria 3170
Telephone 03-9518 3888
Facsimile 03-9518 3833
vsales@moffat.com.au

New South Wales
Telephone 02-8833 4111
nswsales@moffat.com.au

South Australia
Telephone 03-9518 3888
vsales@moffat.com.au

Queensland
Telephone 07-3630 8600
qldsales@moffat.com.au

Western Australia
Telephone 08-9413 2400
wasales@moffat.com.au

New Zealand
Moffat Limited

Rolleston
45 Illinois Drive
Izone Business Hub
Rolleston 7675
Telephone 03-983 6600
Facsimile 03-983 6660
sales@moffat.co.nz

Auckland
Telephone 09-574 3150
sales@moffat.co.nz

an Ali Group company

The Spirit of Excellence